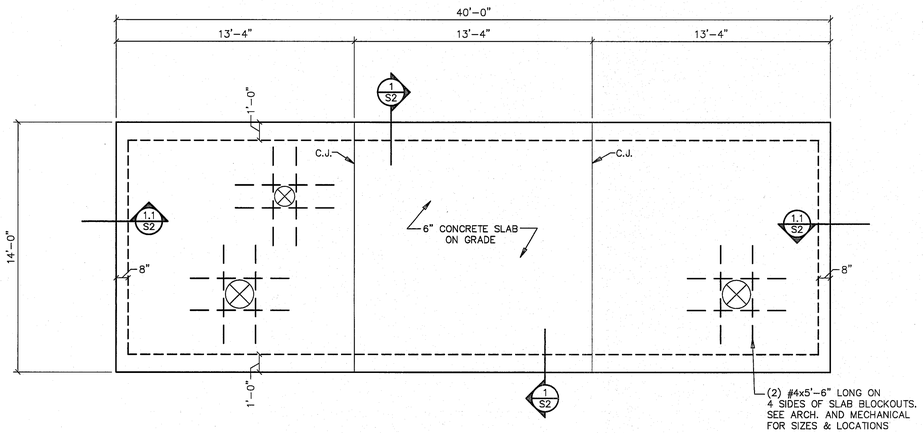

FOUNDATION PLAN 1/4"=1'-0" NORTH

1. TOP OF SLAB ELEVATION = 100'-0".
2. VERIFY BUILDING ORIENTATION WITH ARCHITECTURAL & CIVIL SITE PLANS.
3. REINFORCE CONCRETE SLAB W/ #4 @ 12 EA. WAY. PLACE IN MIDDLE OF SLAB.

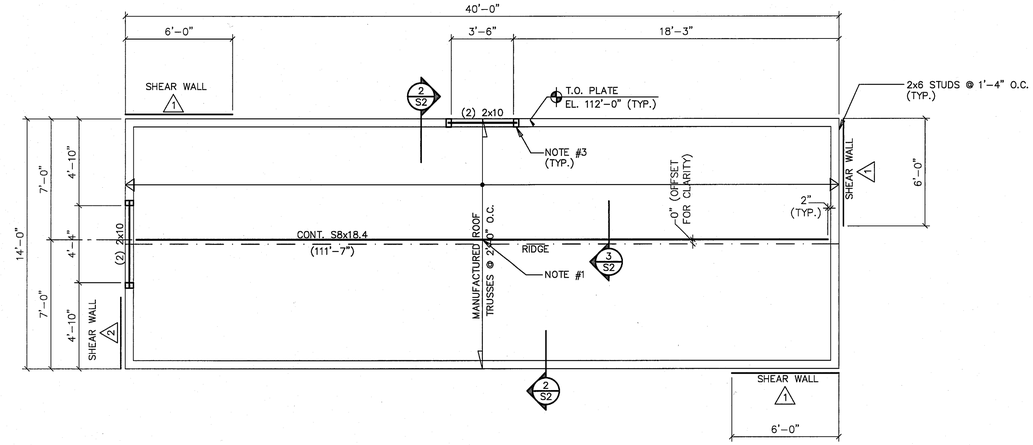

ROOF FRAMING PLAN 1/4"=1'-0" NORTH

1. TRUSS MANUFACTURER SHALL DESIGN TRUSSES FOR BOTTOM CHORD CONCENTRATED LOADS DUE TO MATERIAL HOIST. DESIGN FOR MINIMUM 50 lb. DEAD LOAD & 450 lb. LIVE LOAD, LOCATED AT CENTER OF EACH TRUSS.
2. TOP OF BEAM ELEVATION NOTED THUS: (XXX'-XX").
3. BEAR EXTERIOR WALL HEADERS ON MIN. (2) 2x6 JAMB STUDS WITH ONE 2x6 KING STUD EACH END.

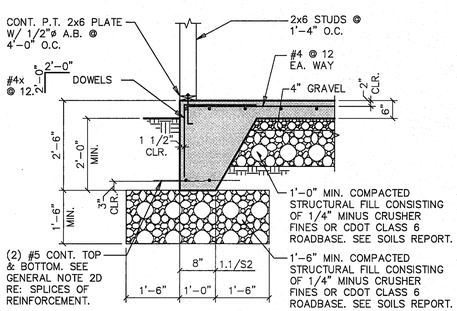

SECTION 1/S2 1.1/S2 1/2"=1'-0"

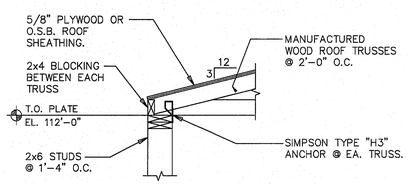

SECTION 2/S2 3/4"=1'-0"

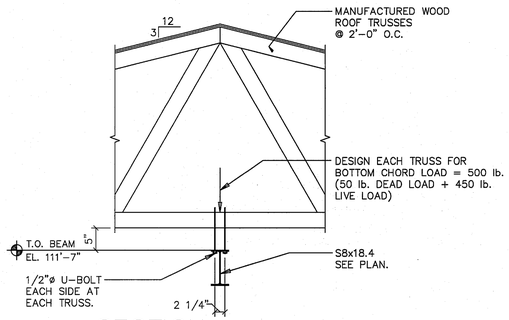

SECTION 3/S2 3/4"=1'-0"

COLORADO REGISTERED PROFESSIONAL ENGINEER
04/25/16

Michael E. Oney
architect
115 N Fifth Street, Suite 409
Grand Junction, Colorado 81501
(970) 254-9089
meoarch@frontier.net

Lindauer·Dunn, Inc.
STRUCTURAL ENGINEERS
802 Road Avenue
Grand Junction, CO 81501
PHONE: 970-241-0900
FAX: 970-243-2430
www.lindauerdunn.com

Delta Pump Station

Delta, Colorado

Adress

Foundation and Roof Plans

Project No.:	16.033
Date:	04/20/16
Drawn By:	kdn
Revisions:	

Sheet

S2