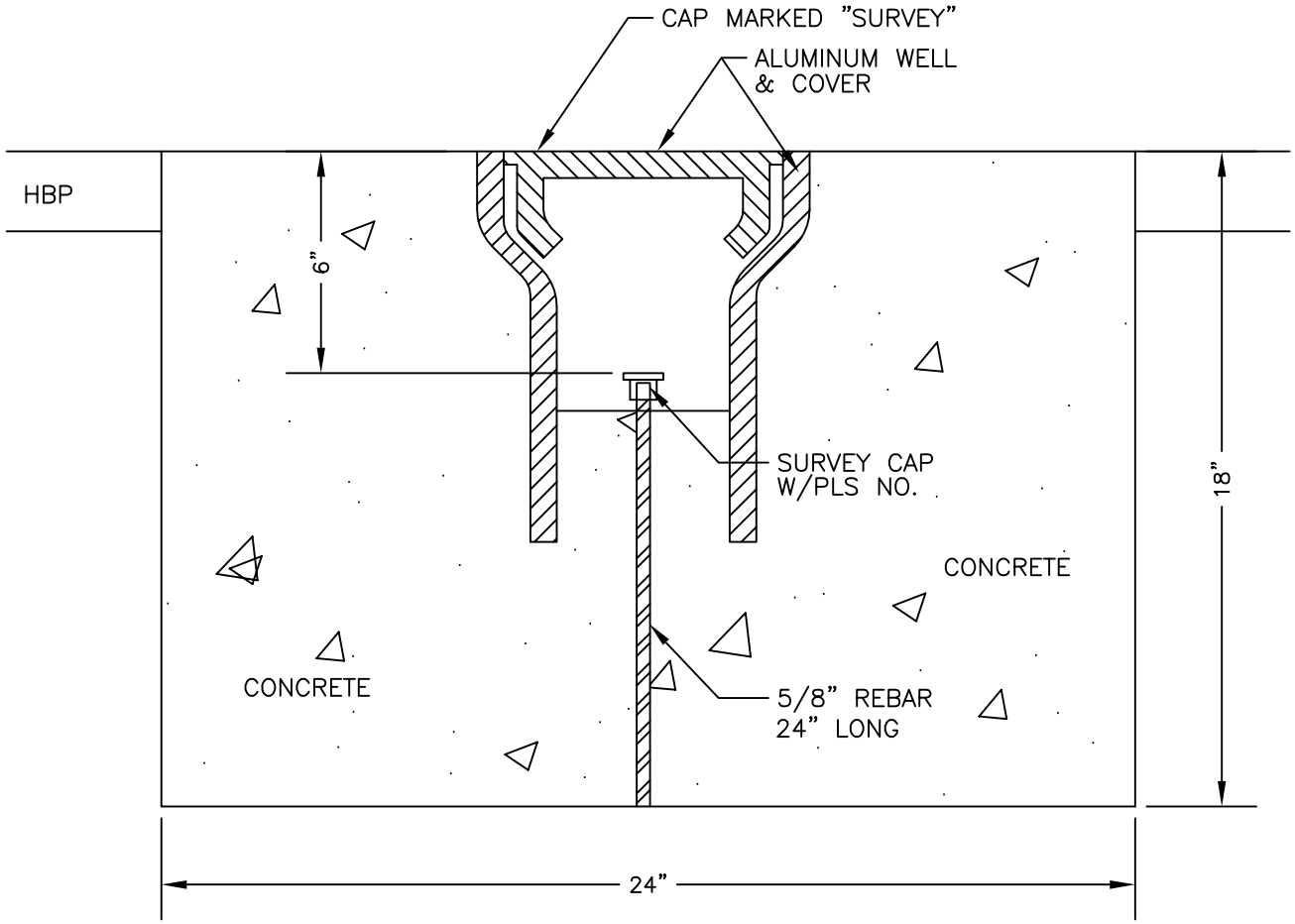

City of DELTA

CITY of DELTA
360 MAIN STREET
DELTA, CO 81416

STREET INTERSECTION
MONUMENT DETAIL

DATE: JUNE 1999

SHEET R22 OF 24