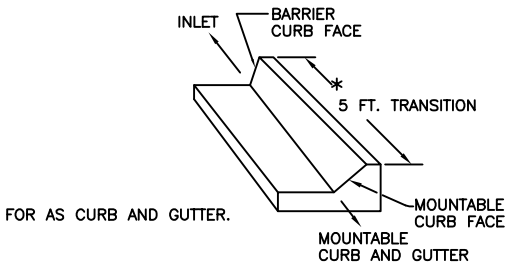


TRANSITION CURB

MEET SHAPE OF NORMAL BARRIER

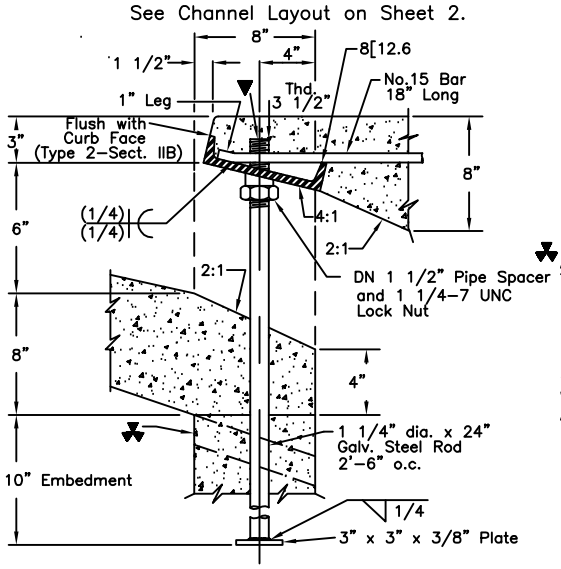


▼CURB FACE ASSEMBLY,
PLACE ENTIRE ASSEMBLY BEFORE POURING CONCRETE

▲– FOR A 1'–0" PAN SLOPE 6:1

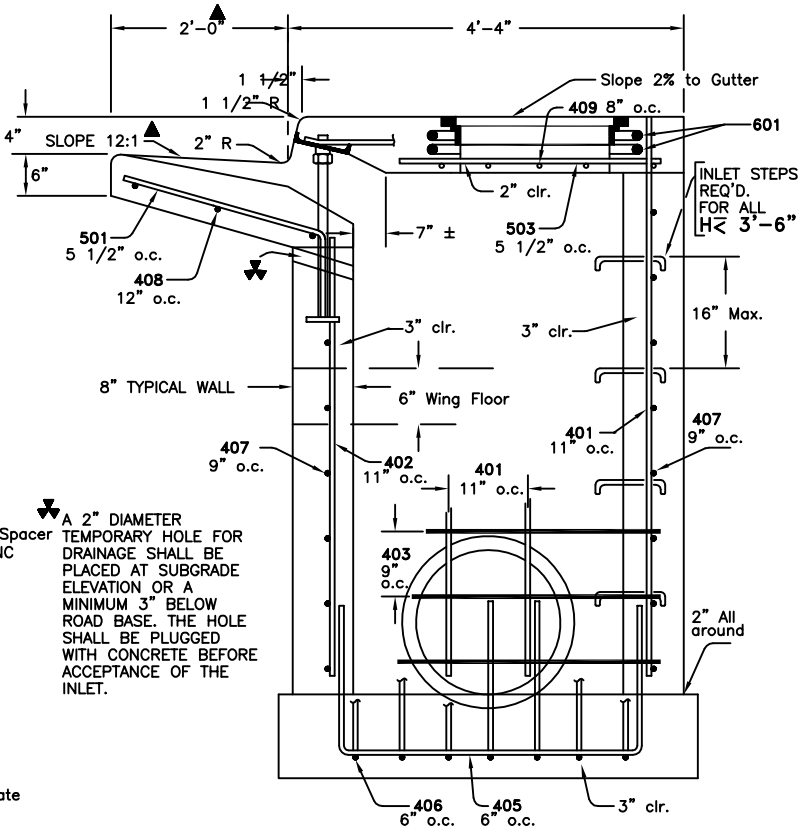


▼A 2" DIAMETER TEMPORARY HOLE FOR DRAINAGE SHALL BE PLACED AT SUBGRADE ELEVATION OR A MINIMUM 3" BELOW ROAD BASE. THE HOLE SHALL BE PLUGGED WITH CONCRETE BEFORE ACCEPTANCE OF THE INLET.

SECTION B–B
TYPICAL END VIEW

NOTE: MANHOLE RING & COVER, STATION POINT AND OUTFLOW PIPE SHALL BE LOCATED AT THE SAME END OF THE INLET.

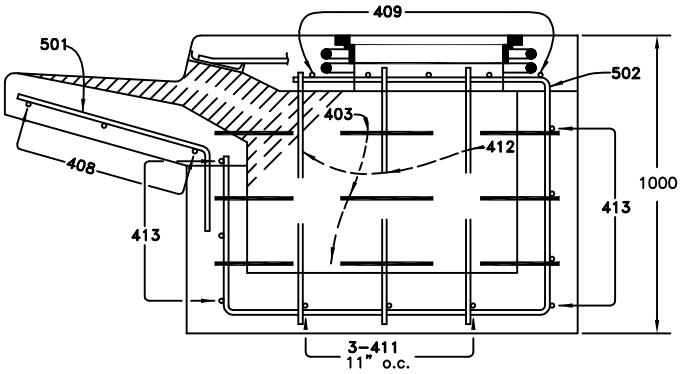


(DOTTED BARS ARE IN SECTION d–d)
SECTIONS c–c & d–d

City of DELTA

CITY of DELTA
360 MAIN STREET
DELTA, CO 81416

CURB INLET TYPE R

SHEET 2 OF 4

DATE: JUNE 1999

SHEET R19 OF 24