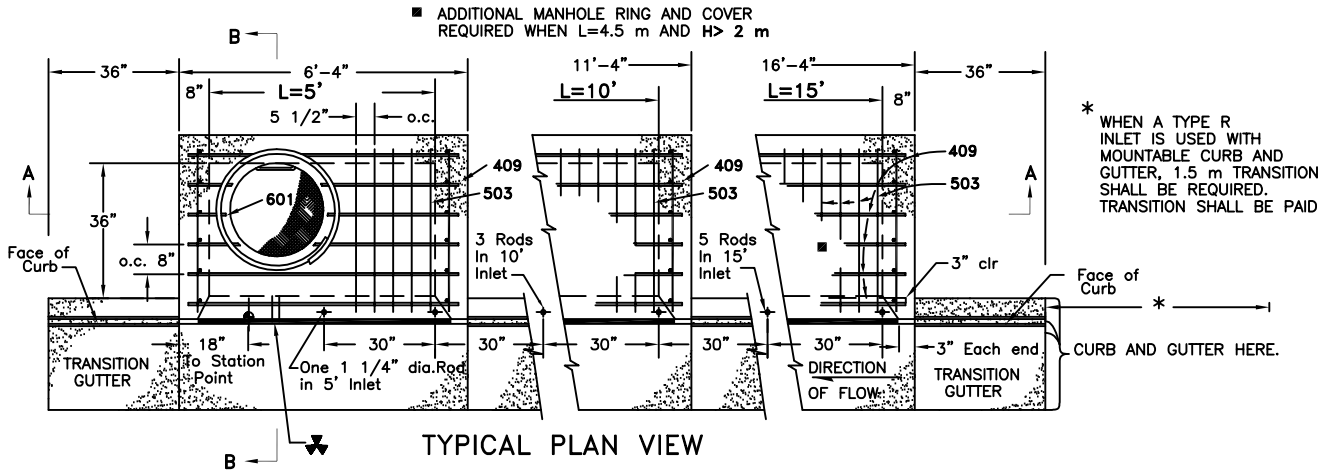

TYPICAL PLAN VIEW

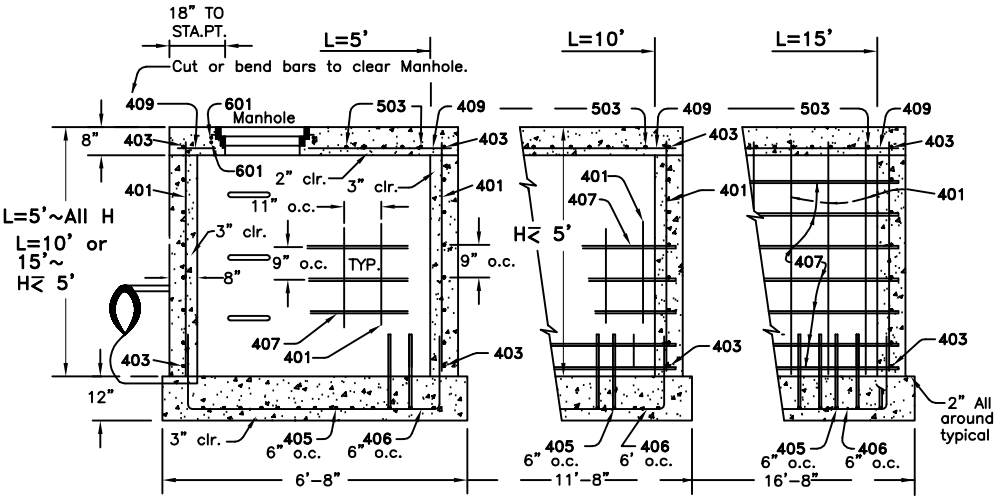

SECTION A–A REGULAR INLET

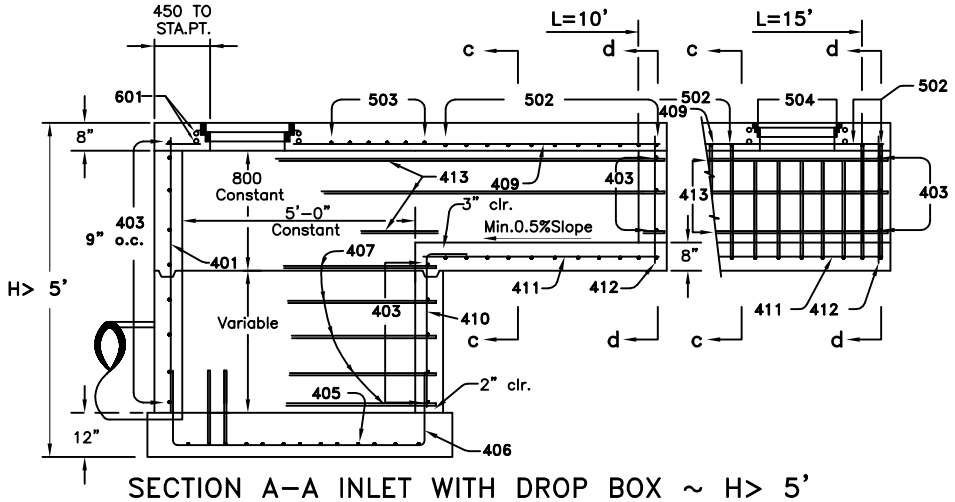

SECTION A–A INLET WITH DROP BOX ~ H> 5'

City of DELTA

CITY of DELTA
360 MAIN STREET
DELTA, CO 81416

CURB INLET TYPE R

SHEET 1 OF 4

DATE: JUNE 1999

SHEET R18 OF 24