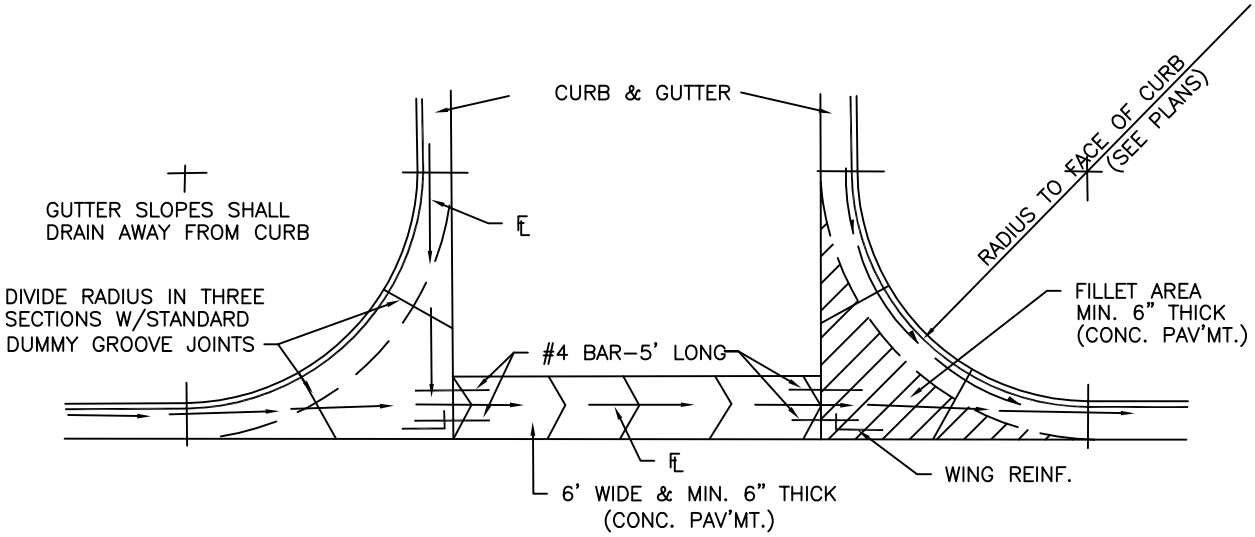

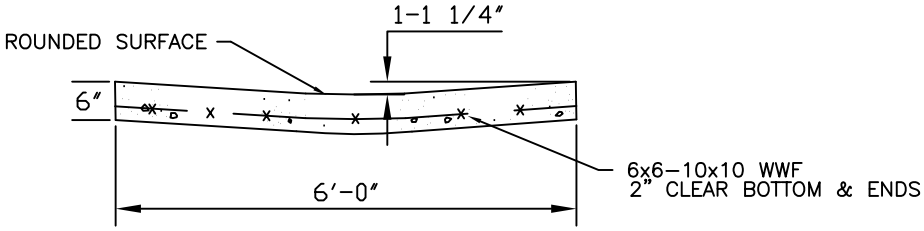

City of DELTA

CITY of DELTA
360 MAIN STREET
DELTA, CO 81416

CROSS PAN AND FILLET

DATE: JUNE 1999

SHEET R13 OF 24