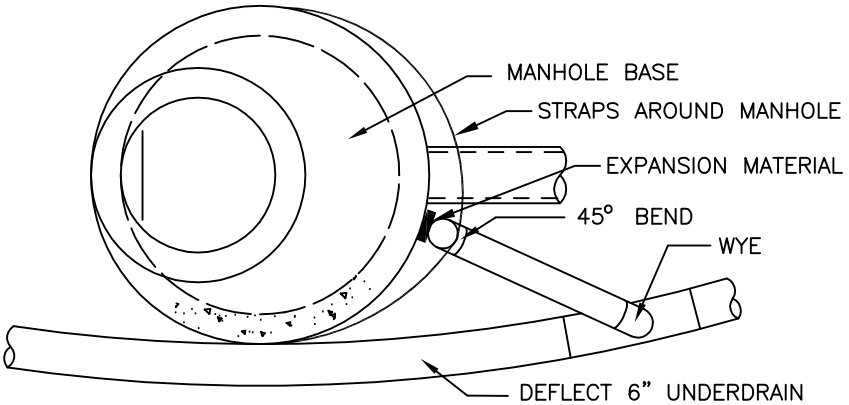

PLAN VIEW

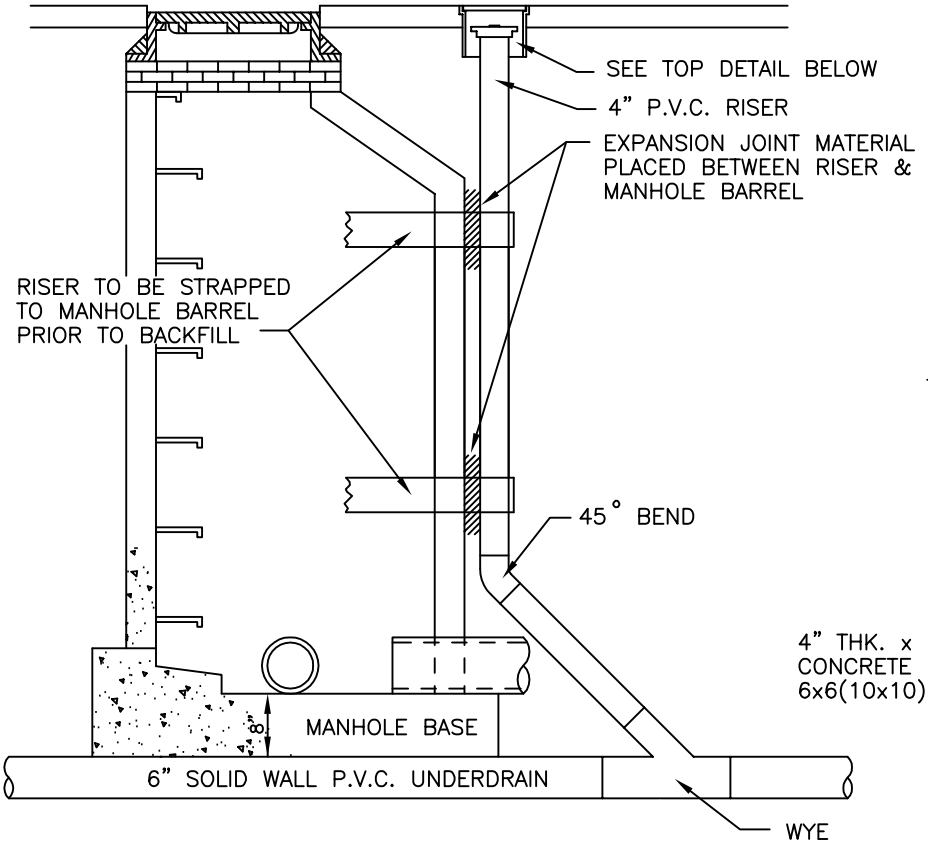

SIDE VIEW

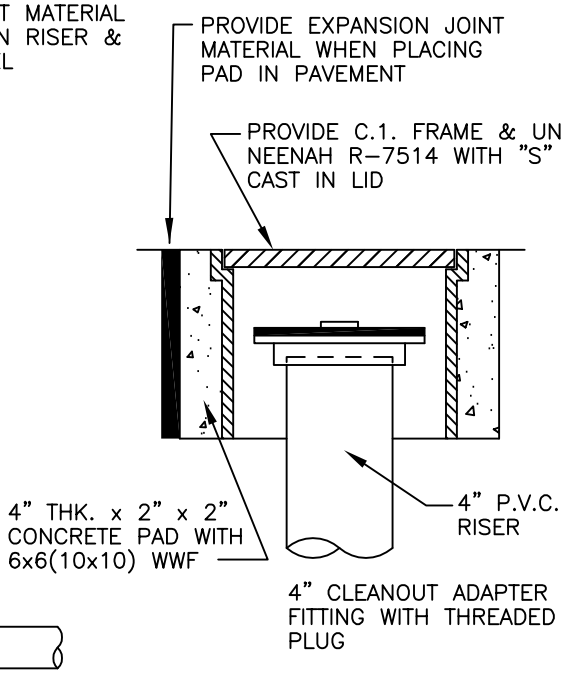

TOP DETAIL

N.T.S.

City of DELTA

CITY of DELTA
360 MAIN STREET
DELTA, CO 81416

TYPICAL UNDERDRAIN CLEANOUT DETAIL

DATE: DEC. 1998 | SHEET SS10 OF 10