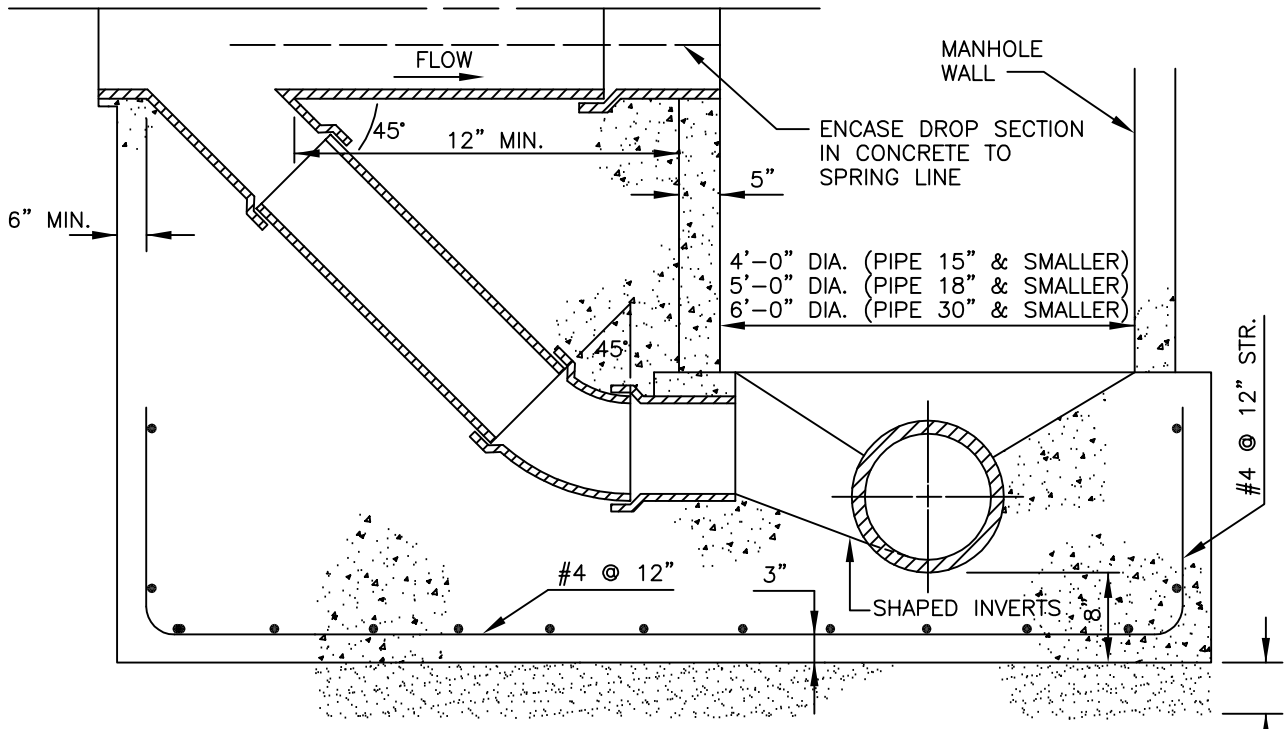

SECTION A–A

4" MINIMUM THICKNESS BEDDING BASE

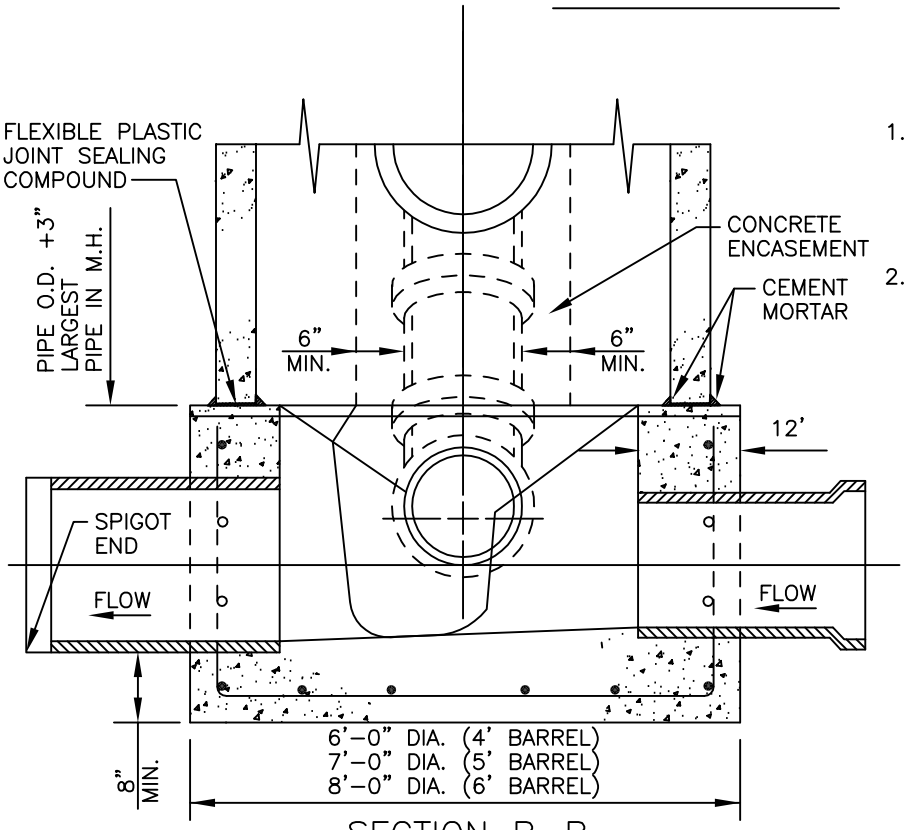

SECTION B–B

NOTES:

1. THIS MANHOLE IS REQUIRED WHEN A SEWER ENTERS A MANHOLE AT AN INVERT ELEVATION OF 24" OR MORE ABOVE THE INVERT OF THE MANHOLE (SEE DESIGN STDS. 4.32.02).
2. JOINTS TO BE SET IN FLEXIBLE BUTYL RESIN SEALING COMPOUND AND GROUTED WITH MORTAR INSIDE AND OUTSIDE.

City of DELTA

CITY of DELTA
360 MAIN STREET
DELTA, CO 81416

DROP MANHOLE DETAIL

DATE: DEC. 1998

SHEET SS4 OF 10