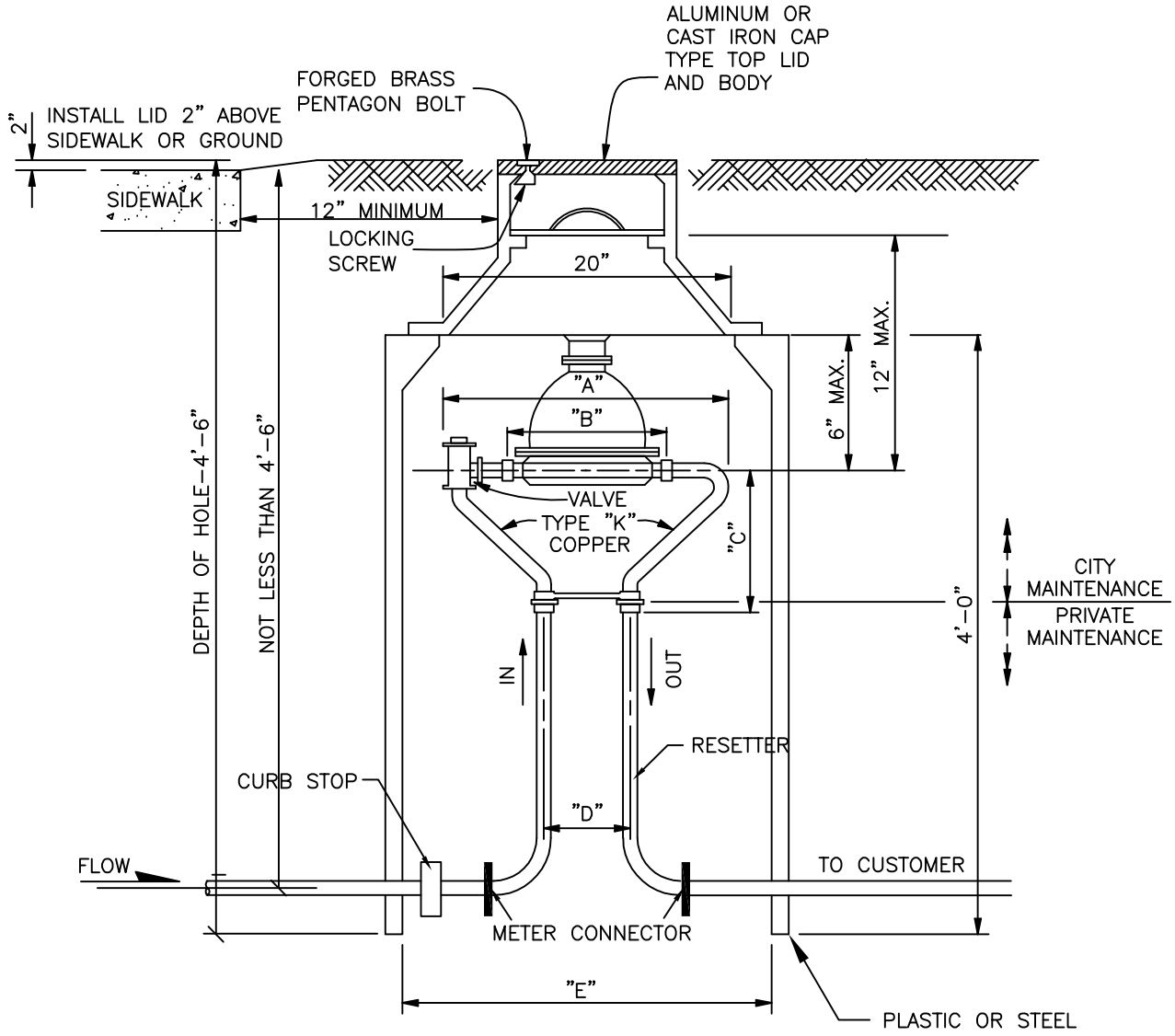

METER SIZE	A	B	C	D	E
3/4"	14 1/4"	9 5/16"	8 15/16"	5"	25"
1"	17 1/4"	11 1/16"	11 1/4"	6"	25"

(PAGE 1 OF 2)

City of DELTA

CITY of DELTA
360 MAIN STREET
DELTA, CO 81416

SETTINGS FOR
3/4" & 1" METERS

DATE: DEC. 1998

SHEET W8 OF 24