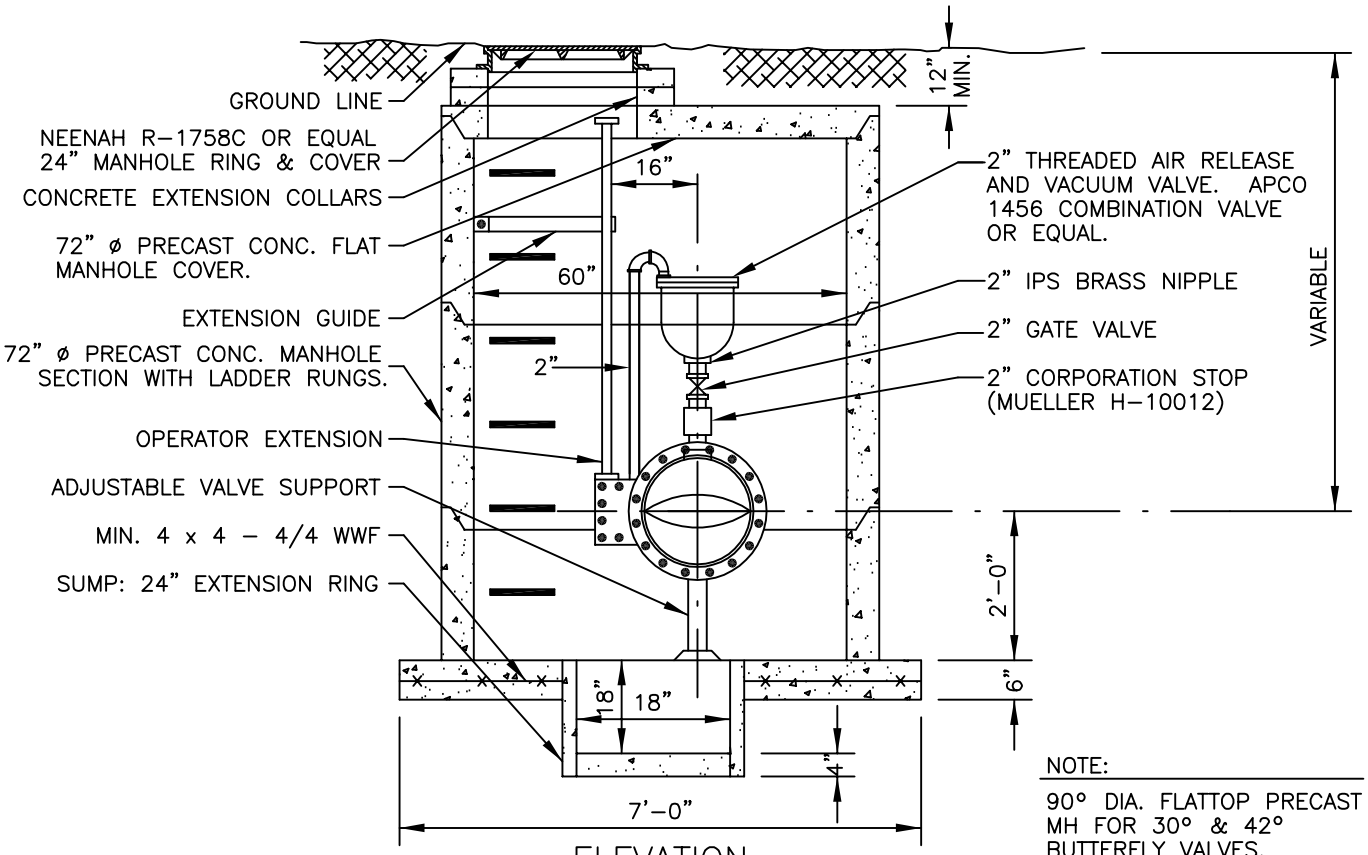

ELEVATION

NOTE:

90° DIA. FLATTOP PRECAST MH FOR 30° & 42° BUTTERFLY VALVES.

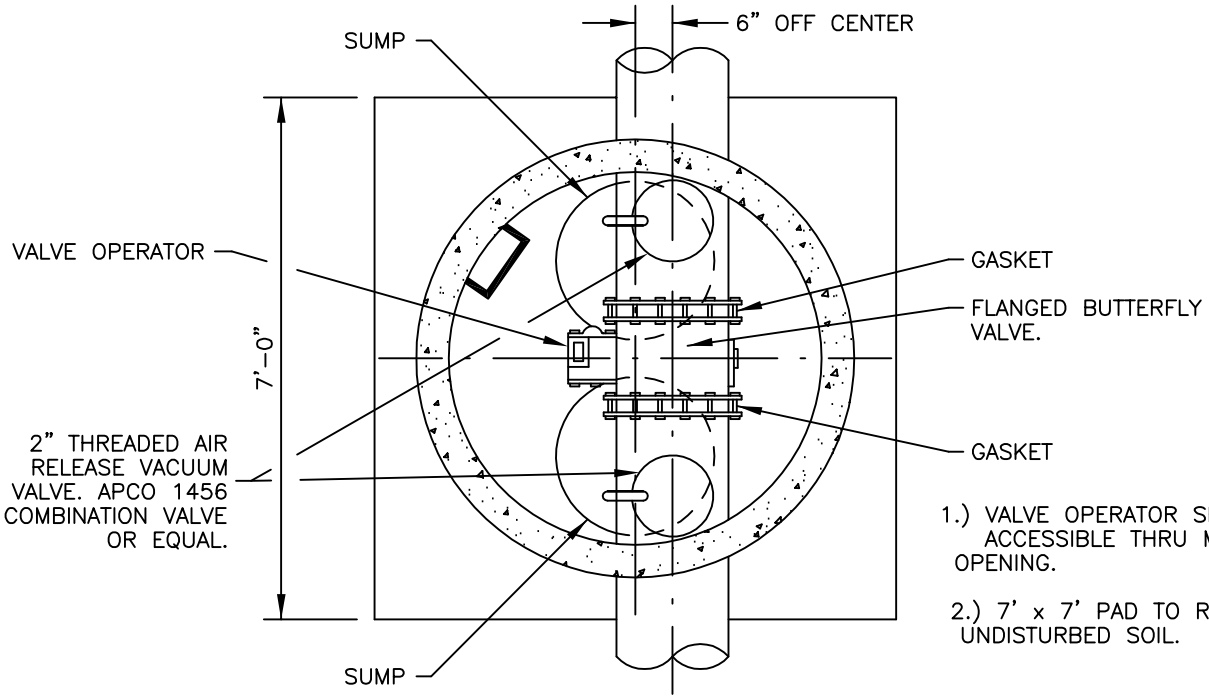

PLAN

1.) VALVE OPERATOR SHALL BE ACCESSIBLE THRU MANHOLE OPENING.

2.) 7' x 7' PAD TO REST ON UNDISTURBED SOIL.

City of DELTA

CITY of DELTA
360 MAIN STREET
DELTA, CO 81416

BUTTERFLY VALVE INSTALLATION IN WATER MAINS 16" & LARGER

DATE: DEC. 1998

SHEET W20 OF 24